DYNAMIC PROJECTION
INSTITUTE

Mounting guide ULS Mirror
Panasonic PT-MZ20 Series Projectors



Thank you for choosing the ULS Mirror.

By following the steps outlined in this mounting guide, you will ensure reliable performance and long-term satisfaction with the product.

Purpose of This Mounting Guide.

This mounting guide demonstrates how to install the ULS Mirror Set together with the appropriate Projector Plate onto the projector. It details recommended positioning relative to the projector body, the pole position on the ULS Base plate, and the ball head orientation on the mirror itself. These recommendations are derived from both precise calculations and extensive practical testing.

⚠ Safety Notice

This device has left our factory in perfect condition. To maintain this condition and ensure safe operation, all safety instructions and warning notes must be followed.

- Never look directly into the light source of the connected projector.
- Keep children away from the device and installation area at all times.

For detailed safety guidelines, technical definitions, and further information, please refer to the official ULS Mirror Manual (June 2025), available at:

https://dynamicprojection.com/transfer/ULS/ULS_Manual_V14_June2025.pdf

@2026 Dynamic Projection Institute GmbH / www.dynamicprojection.com

ULS Mirror Set ULS-MB-4808 Projector plate MHB-3502

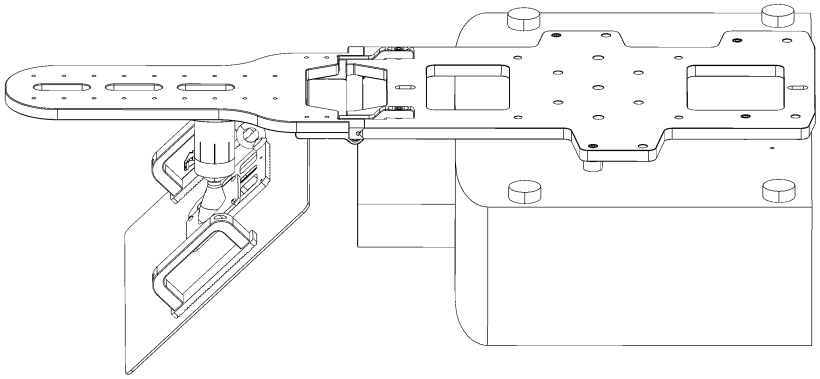

This guide applies to the following variants designed for use with Panasonic PT-MZ20KL / MZ17KL / MZ14KL / MZ11KL projectors, as well as the discontinued predecessor models PT-MZ16KL / MZ13KL / MZ10KL, which share the same housing. The required variant depends on the lens in use and the mirror deflection angle. The set is also compatible with the Panasonic ET-RFD50 rental frame and the EXACT Solutions EVO-P40 frame; but can also be used without a frame.

Three ULS Mirror Sets are available. Depending on the lens used – and consequently the throw ratio – as well as the deflection angle of the mirror, different mirror sizes and pole heights are required. Please note: the values listed below apply exclusively to a 90° vertical deflection. Different deflection angles will require separate calculations.

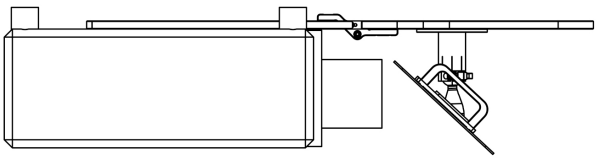

Panasonic Lens PT-MZ20KL 16:10	Throw ratio range	ULS - Mirror size mm	Pole / mm	ULS Mirror Set
ET-EMW300	0.550 - 0.690:1	700 x 480	P135 / 135	ULS-MB-7013
ET-EMW400	0.690 - 0.950:1	480 x 340	P088 / 88	ULS-MB-4808
ET-EMW400 ≥ 0.8:1	0.800 - 0.950:1	340 x 250	P056 / 56	ULS-MB-3405
ET-EMW500	0.950 - 1.36:1	340 x 250	P056 / 56	ULS-MB-3405
ET-EMS650	1.35 - 2.10:1	340 x 250	P056 / 56	ULS-MB-3405
ET-EMT750	2.10 -4 .15:1	340 x 250	P056 / 56	ULS-MB-3405
ET-EMT850	4.12 - 7.40:1	340 x 250	P056 / 56	ULS-MB-3405

@2026 Dynamic Projection Institute GmbH / www.dynamicprojection.com

1a. Screw the four MHZ-15M6 spacers into the mounting points of the projector.

Place the Projector plate MHB-3502 onto the spacers by using 4x M6 x 20 socket screws. Ensure that the correct side of the Projector plate is facing upward and the mounting position is "**A**".

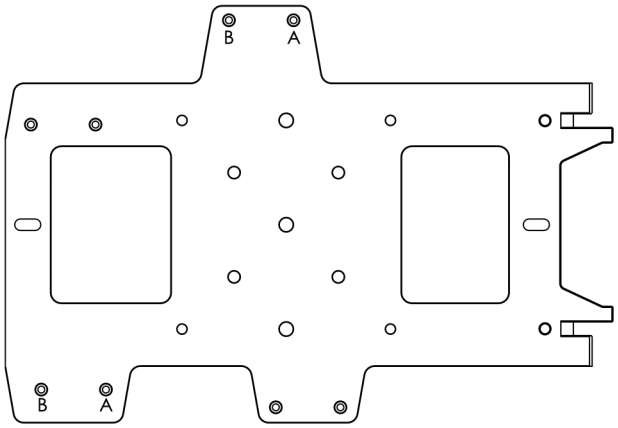

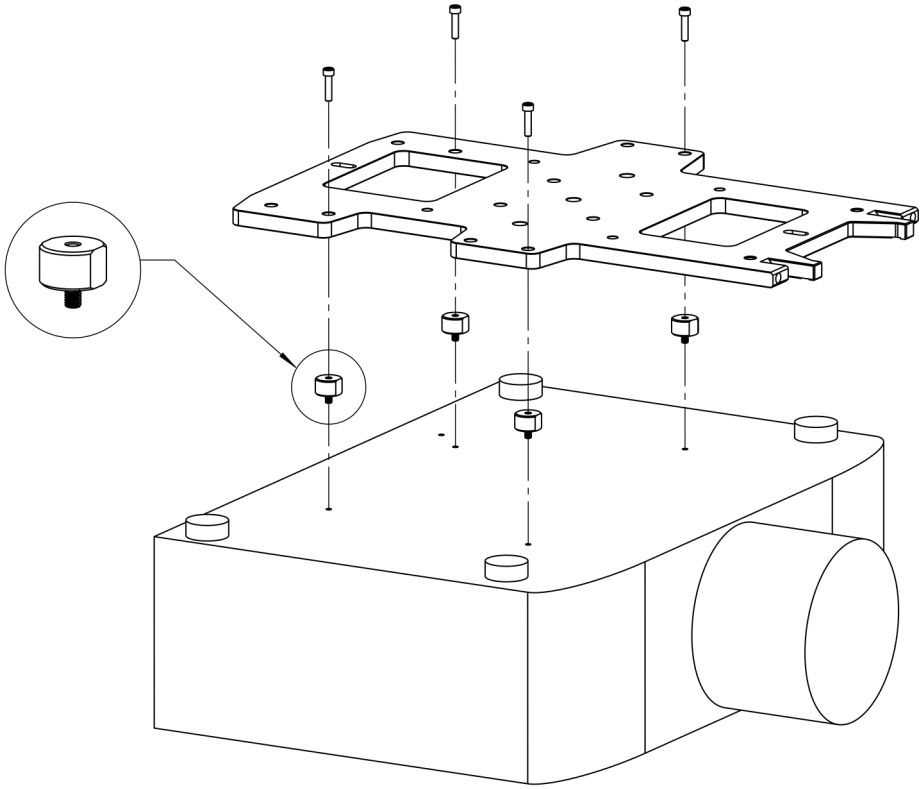

@2026 Dynamic Projection Institute GmbH / www.dynamicprojection.com

1b. If a projector frame is used, screw the four MHZ-15M6 spacers into the mounting points the projector.

Place the Projector Plate MHB-3502 between the frame and the projector and fasten it using 4x M6 x 35 socket screws with washers. Ensure that the correct side of the Projector Plate is facing upward and the mounting position is "**A**".

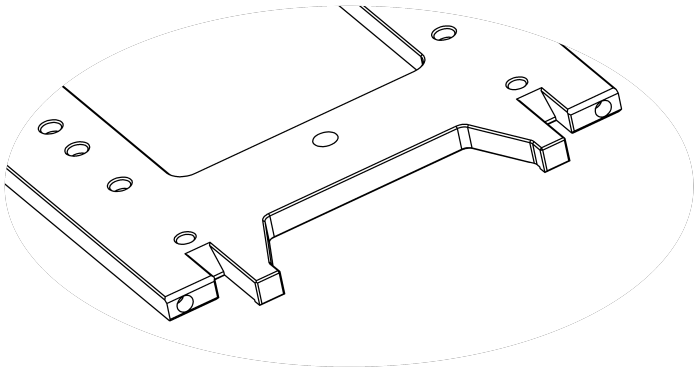

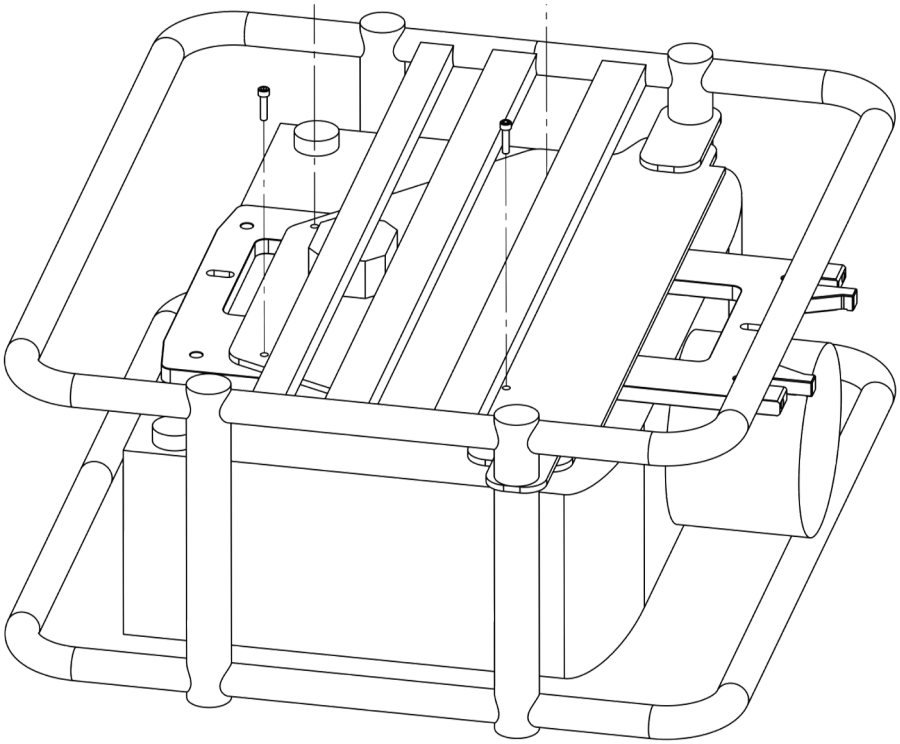

@2026 Dynamic Projection Institute GmbH / www.dynamicprojection.com

2. Mount the ULS Pole onto the ULS Base Plate ULS-BP05 / ULS-BP02 using the 4x M6 x 16 countersunk hex socket screws (Senkkopfschrauben mit Innensechskant) as shown below.

   Depending on the mirror size and the lens used, **use the recommended position (00–06) on the ULS Base plate** as indicated in the table below.

   In all cases, ensure that the mirror is mounted in a way that prevents any risk of damaging the projector lens.

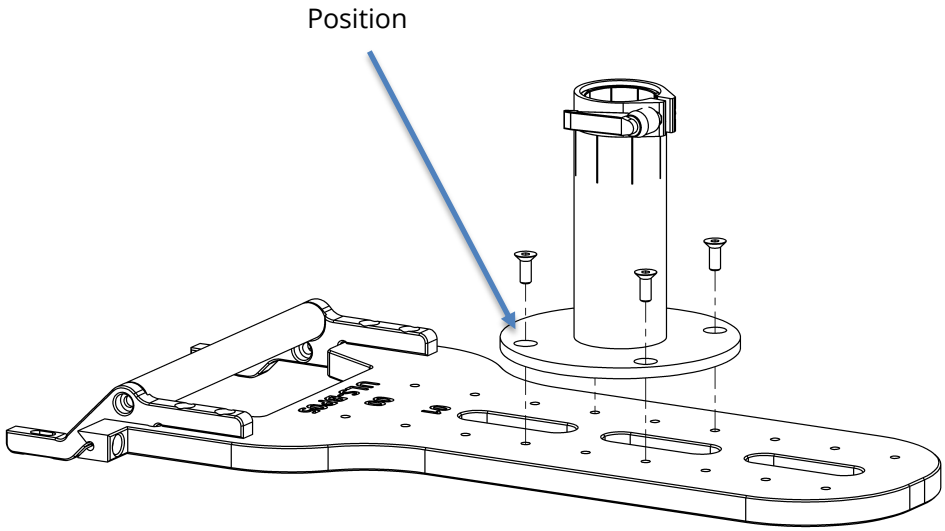

ULS - Mirror size mm	Pole / mm	Panasonic Lens PT-MZ20KL 16:10	Throw ratio	Base plate BP05 / BP02
700 x 480	P135 / 135	ET-EMW300	0.550-0.690:1	Position 02
480 x 340	P088 / 88	ET-EMW400	0.690-0.950:1	Position 01
340 x 250	P056 / 56	ET-EMW400	0.8:1-0.950:1	Position 00
340 x 250	P056 / 56	ET-EMW500	0.950-1.36:1	Position 01
340 x 250	P056 / 56	ET-EMS650	1.35-2.10:1	Position 01/ 02
340 x 250	P056 / 56	ET-EMT750	2.10-4.15:1	Position 02 / 03 / 04
340 x 250	P056 / 56	ET-EMT850	4.12-7.40:1	Position 05 / 06

@2026 Dynamic Projection Institute GmbH / www.dynamicprojection.com

3. Mount the ULS Base Plate ULS-BP05 / ULS-BP02 onto the Projector plate MHB-3502 using 2x M6 x 20 socket head screws from above and 2x M6 x 12 socket head screws from below.

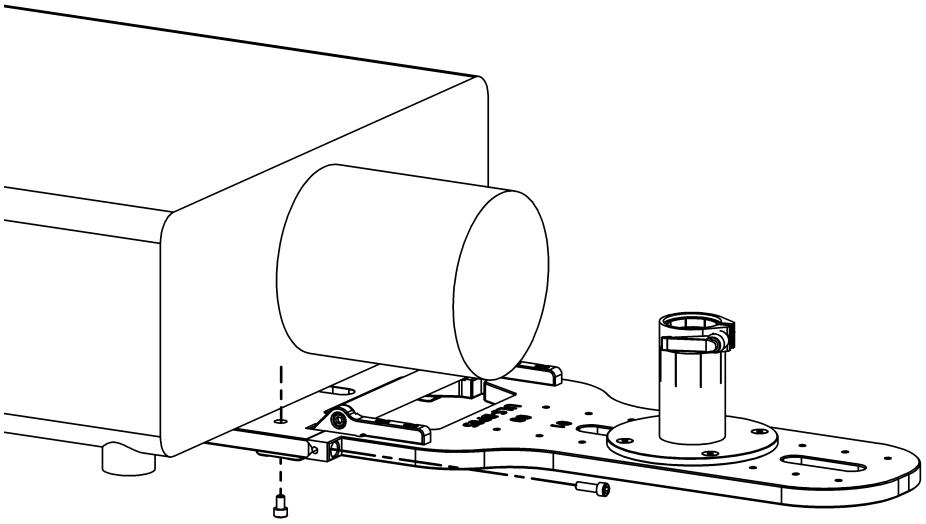

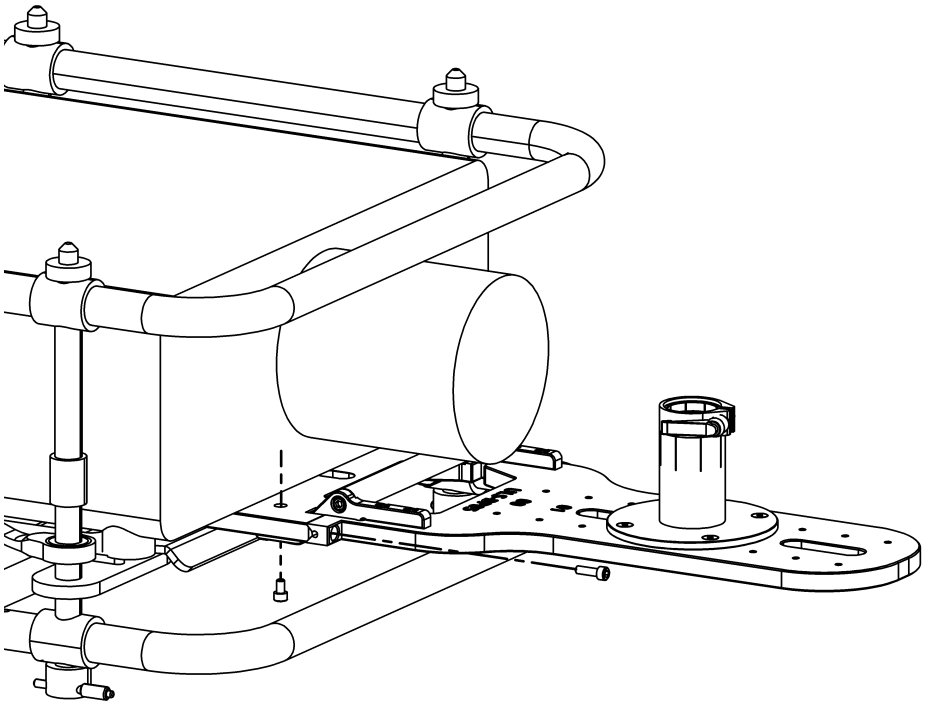

@2026 Dynamic Projection Institute GmbH / www.dynamicprojection.com

4. Mirror assembly – the figure shows a ULS-M340 mirror (340 x 250 mm)
An M8 eye bolt is provided for attaching a safety wire. For any overhead installation, the use of a certified safety wire is mandatory.

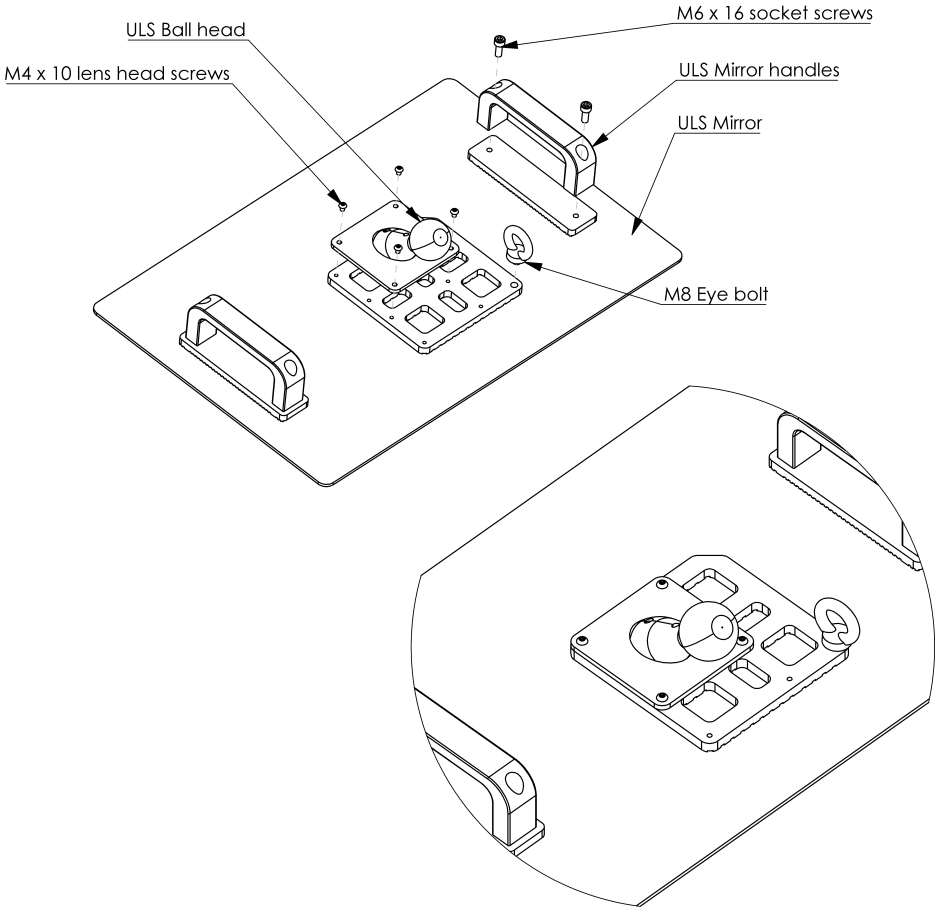

ULS Mirror M480
- Removable handles.
- Changeable positions of ball head
- Mirror size 480 x 340 mm
- Code: ULS-M480

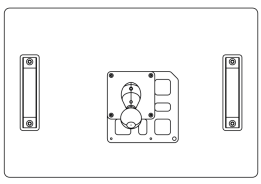

ULS Mirror M700
- Removable / changeable handles.
- Changeable positions of ball head
- Mirror size 700 x 480 mm
- Code: ULS-M700

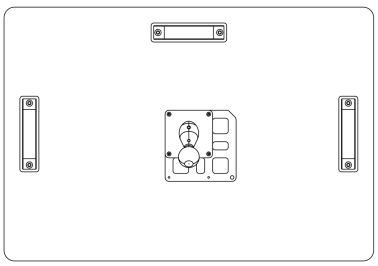

@2026 Dynamic Projection Institute GmbH / www.dynamicprojection.com

5. Place the ring clamp over the ball head, push the ball head into the ball socket of the ULS Pole and secure the position with the locking lever.

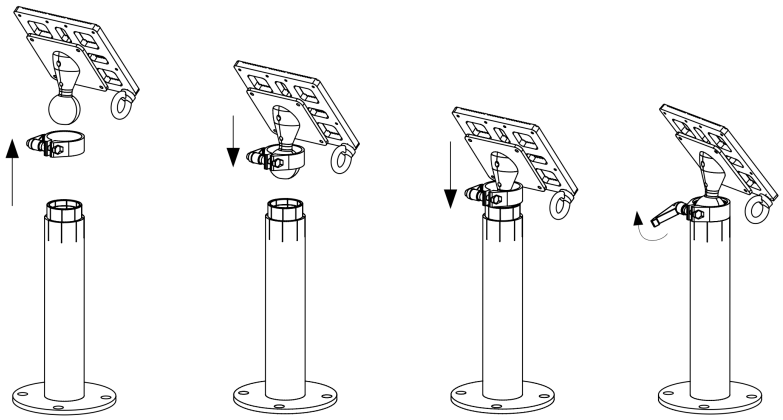

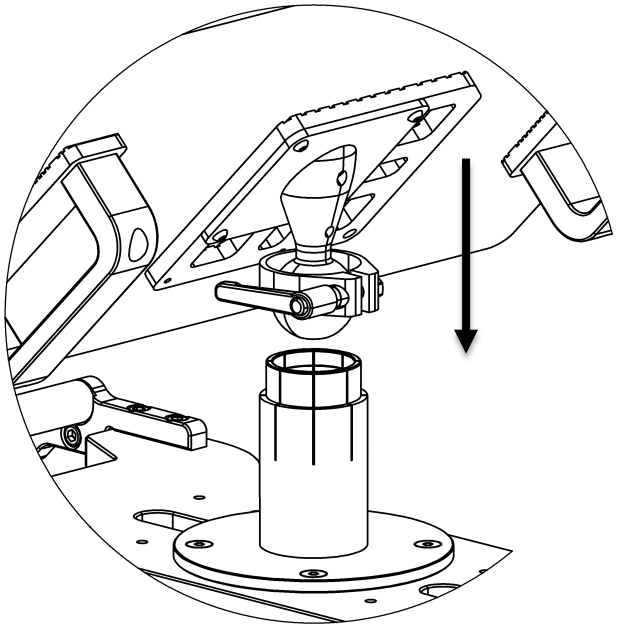

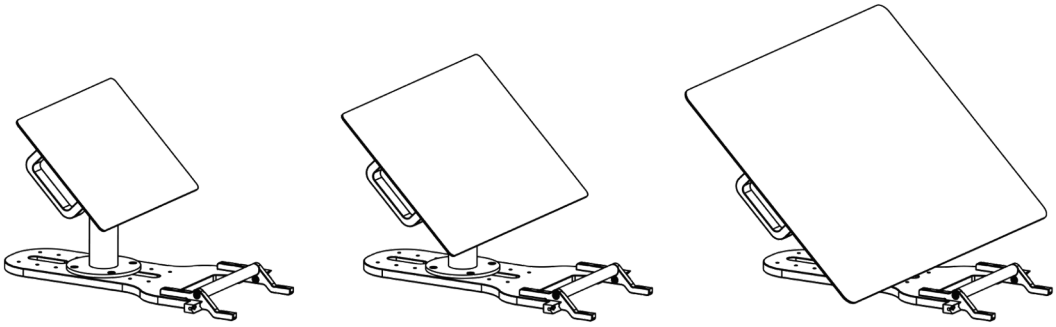

@2026 Dynamic Projection Institute GmbH / www.dynamicprojection.com

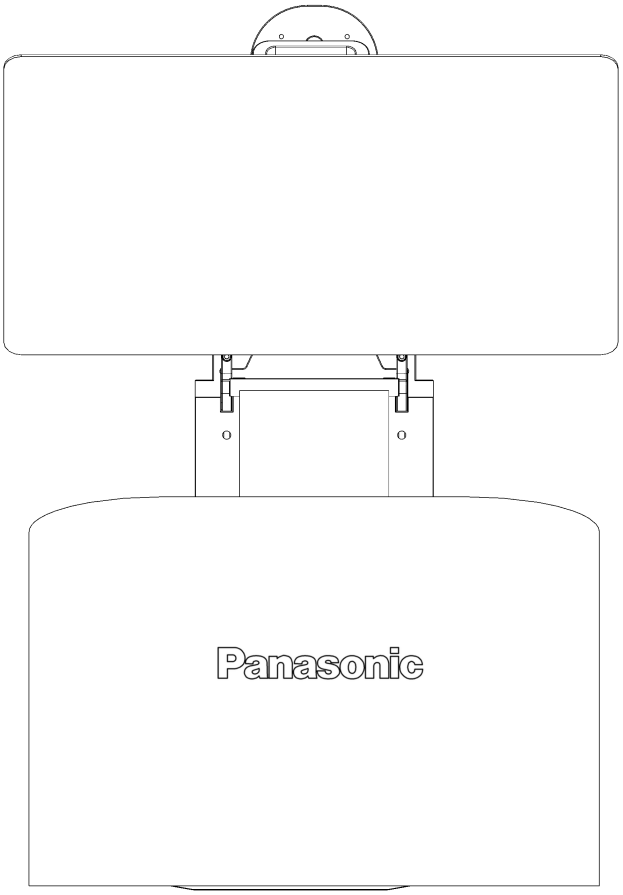

Panasonic PT-MZ20KL + ET-EMW300
ULS-M700 mirror (ULS Mirror Set 7013)

Further information on mounting configurations, mechanical integration and safety instructions can be found in the official ULS Mirror Manual on our website.

https://www.dynamicprojection.com/uls-support

@2026 Dynamic Projection Institute GmbH / www.dynamicprojection.com

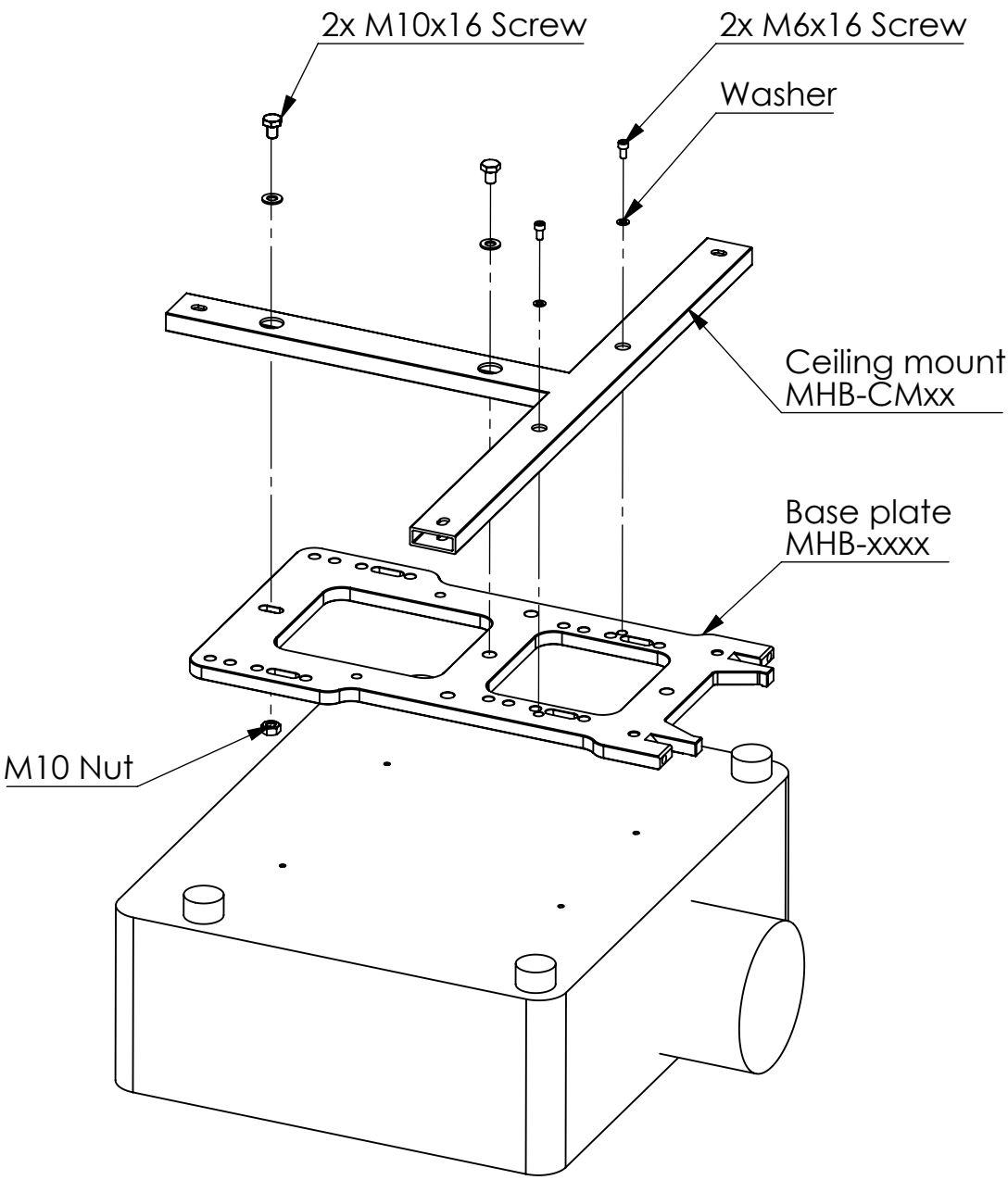

WENN NICHT ANDERS DEFINIERT: TOLERANZEN: DIN ISO 2768-1 m	ROHTEIL:			ENTGRATEN UND SCHARFE KANTEN BRECHEN	ZEICHNUNG NICHT SKALIEREN	ÄNDERUNG
					DYNAMIC PROJECTION INSTITUTE	Copyright (c) 2014-2024 by Dynamic Projection Institute Herstellungs und Vertriebs GmbH. All Rights Reserved.

	NAME	SIGNATUR	DATUM
GEZEICHNET	Stokic		05.04.2024
GEPRÜFT			
GENEHMIGT			
PRODUKTION			
QUALITÄT			

BENENNUNG:

How to mount the ceiling mount MHB-CMxx to the base plate

ZEICHNUNGSNR.

DPI-MHB-2604_MHB-CM26

A4

GEWICHT:

BLATT 1 VON 1

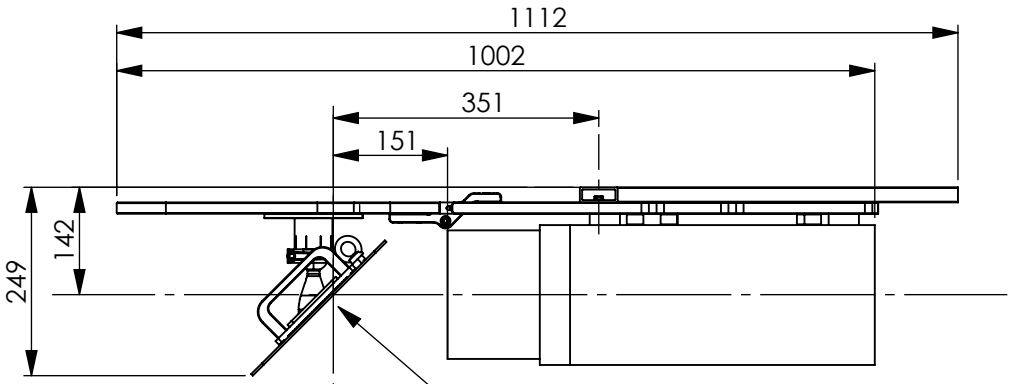

Vertical center of projection / lens shift 000 / 000

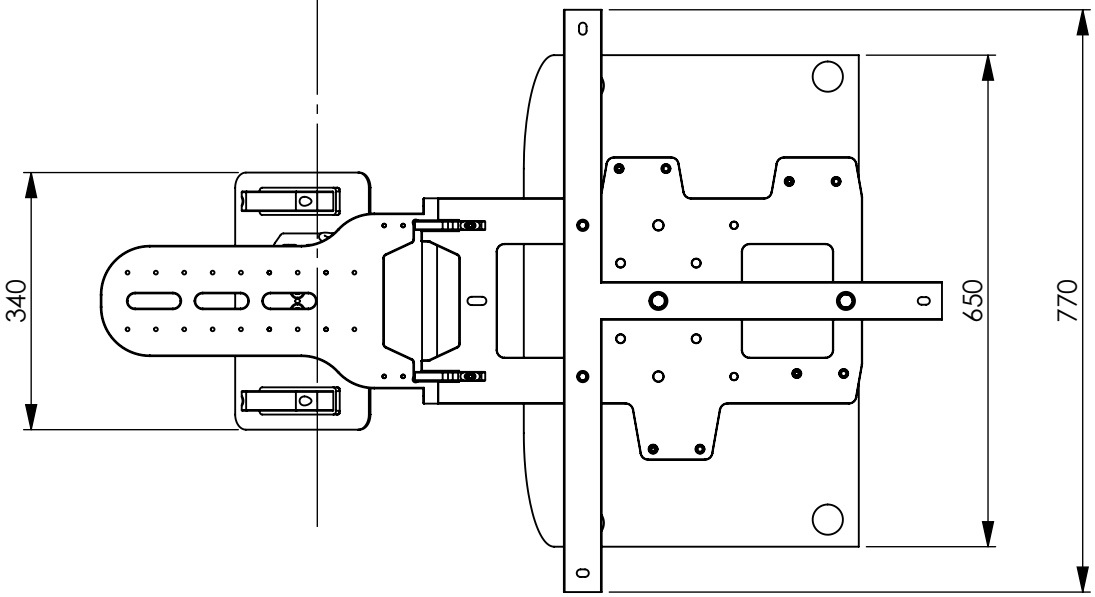

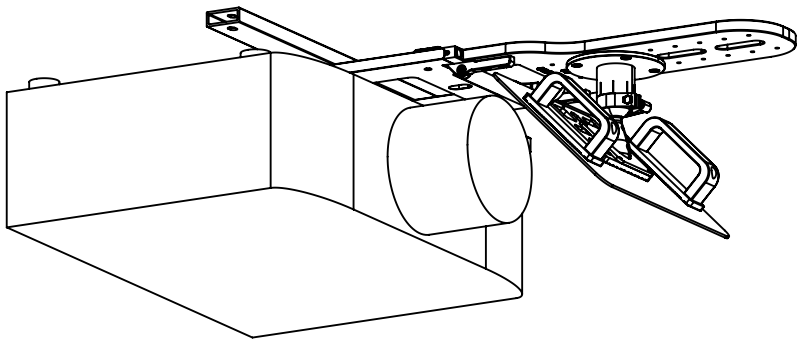

Mirror Size M340 = 340 x 250 mm / Pole P056 - Pos 01 / Projector Plate Pos A
15 mm spacers must be used

WENN NICHT ANDERS DEFINIERT: TOLERANZEN: DIN ISO 2768-1 m		OBERFLÄCHENBESCHAFFENHEIT:		ENTGRATEN UND SCHARFE KANTEN BRECHEN	ZEICHNUNG NICHT SKALIEREN	ÄNDERUNG
					DYNAMIC PROJECTION INSTITUTE	Copyright (c) 2014-2025 by Dynamic Projection Institute Herstellungs und Vertriebs GmbH. All Rights Reserved.
	NAME	SIGNATUR	DATUM		BENENNUNG: ULS-MB-3405 + MHB-3502 and Ceiling Mount MHB-CM35 Panasonic PT-MZ20K with ET-EMW500 Lens	
GEZEICHNET			10.11.2026			
GEPRÜFT						
GENEHMIGT						
PRODUKTION						
QUALITÄT				WERKSTOFF:	ZEICHNUNGSNR. DPI-ULS-MB-3405_MZ20K_EMW500	A4
				GEWICHT:	MASSSTAB:1:10	BLATT 1 VON 1

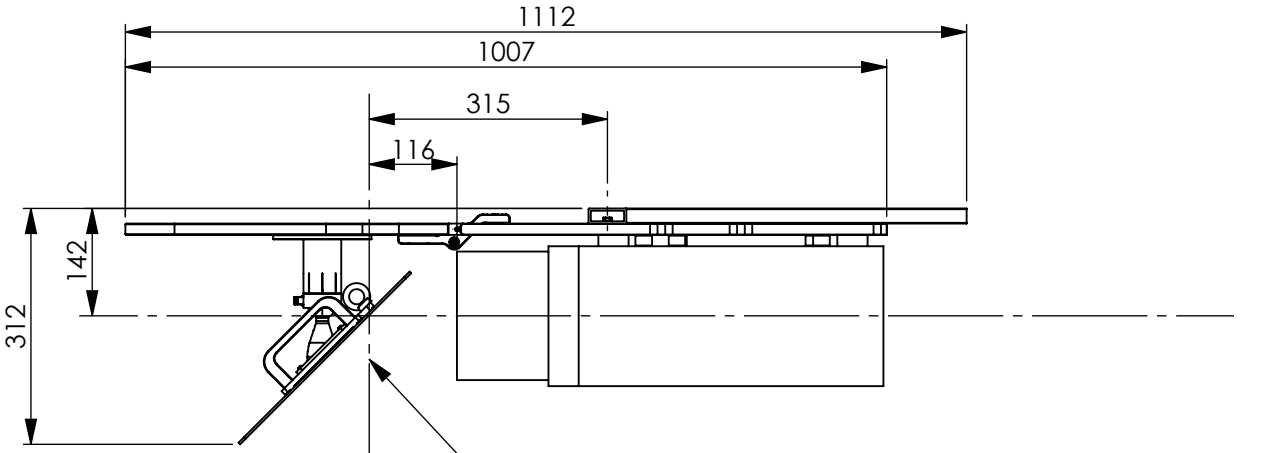

Vertical center of projection / lens shift 000 / 000

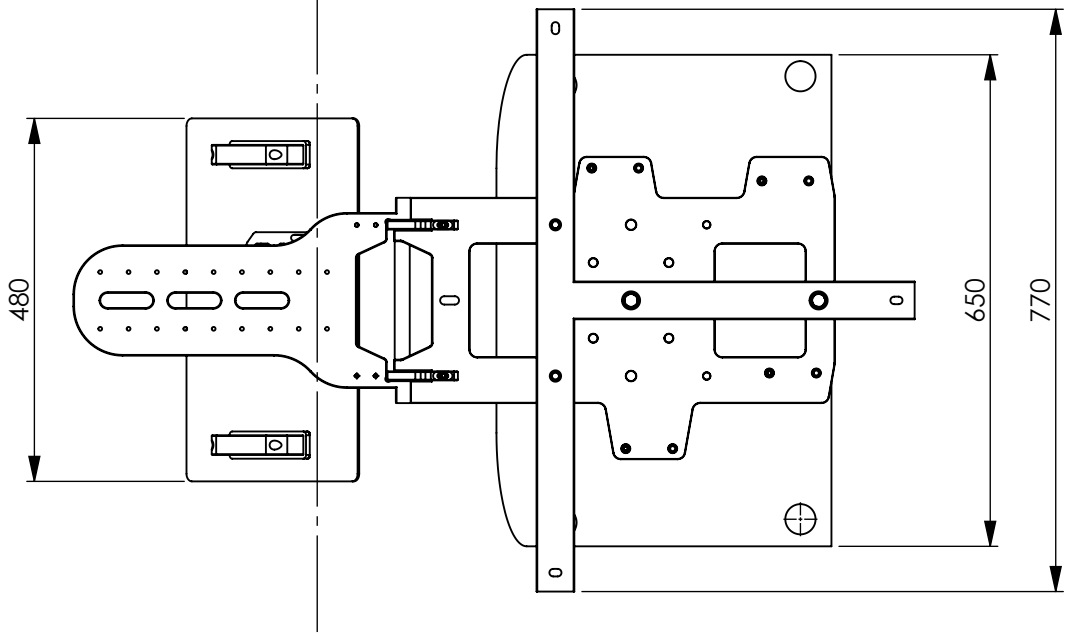

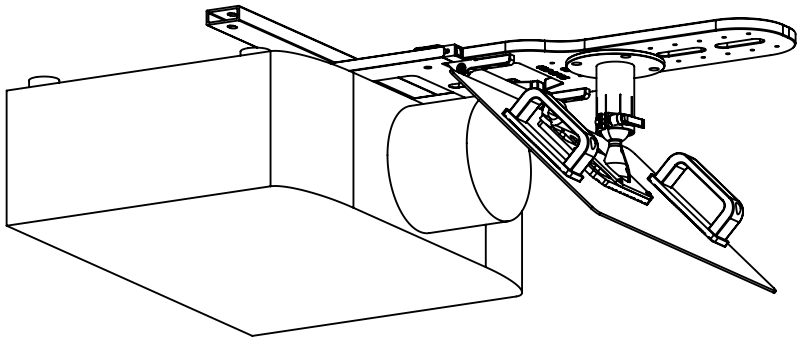

Mirror Size M480 = 480 x 320 mm / Pole P088 - Pos 01 / Projector Plate Pos A
15 mm spacers must be used

WENN NICHT ANDERS DEFINIERT: TOLERANZEN: DIN ISO 2768-1 m		OBERFLÄCHENBESCHAFFENHEIT:		ENTGRATEN UND SCHARFE KANTEN BRECHEN	ZEICHNUNG NICHT SKALIEREN	ÄNDERUNG
					DYNAMIC PROJECTION INSTITUTE	Copyright (c) 2014-2025 by Dynamic Projection Institute Herstellungs und Vertriebs GmbH. All Rights Reserved.
	NAME	SIGNATUR	DATUM		BENENNUNG: ULS-MB-4808 + MHB-3502 and Ceiling Mount MHB-CM35 Panasonic PT-MZ20K with ET-EMW400 Lens	
GEZEICHNET			08.11.2026			
GEPRÜFT						
GENEHMIGT						
PRODUKTION						
QUALITÄT				WERKSTOFF:	ZEICHNUNGSNR. DPI-ULS-MB-4808_MZ20K_EMW400	A4
				GEWICHT:	MASSSTAB:1:10	BLATT 1 VON 1

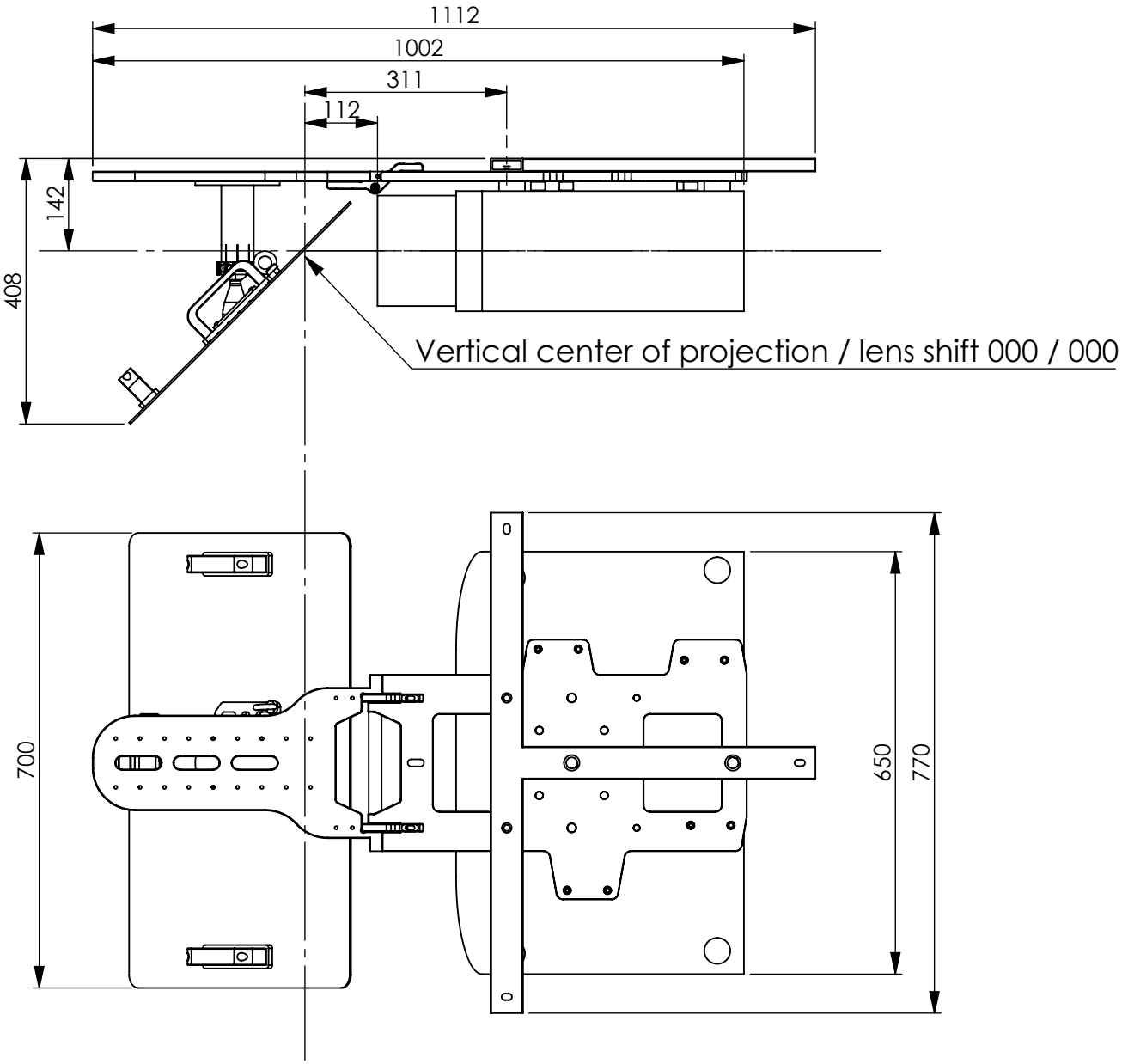

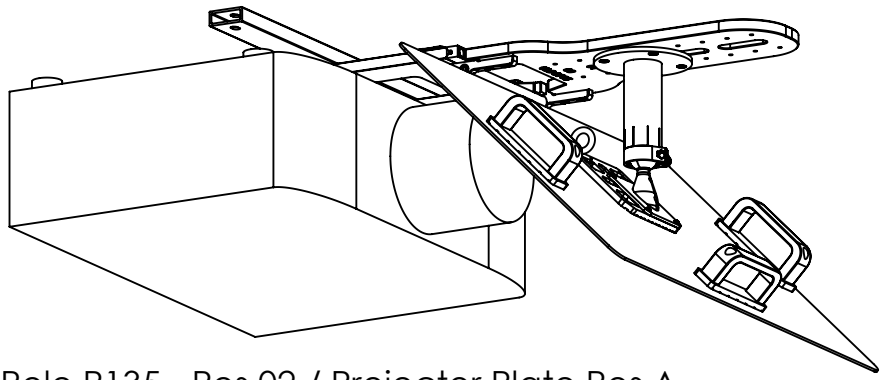

Mirror Size M700 = 700 x 480 mm / Pole P135 - Pos 02 / Projector Plate Pos A
15 mm spacers must be used

WENN NICHT ANDERS DEFINIERT: TOLERANZEN: DIN ISO 2768-1 m		OBERFLÄCHENBESCHAFFENHEIT:		ENTGRATEN UND SCHARFE KANTEN BRECHEN	ZEICHNUNG NICHT SKALIEREN	ÄNDERUNG
					DYNAMIC PROJECTION INSTITUTE	Copyright (c) 2014-2025 by Dynamic Projection Institute Herstellungs und Vertriebs GmbH. All Rights Reserved.
	NAME	SIGNATUR	DATUM			BENENNUNG: ULS-MB-7013 + MHB-3502 and Ceiling Mount MHB-CM35 Panasonic PT-MZ20K with ET-EMW300 Lens
GEZEICHNET			12.11.2026			
GEPRÜFT						
GENEHMIGT						
PRODUKTION						
QUALITÄT				WERKSTOFF:	ZEICHNUNGSNR. DPI-ULS-MB-7013_MZ20K_EMW300	A4
				GEWICHT:	MASSSTAB:1:10	BLATT 1 VON 1